A Comparative Analysis of Several Back Propagation Algorithms in Wireless Channel for ANN-Based Mobile Radio Signal Detector

S. Roy Chatterjee, R. Mandal, M. Chakraborty

Abstract*: *Application of Artificial Neural Network (ANN) in cognitive radio has received considerable attention to incorporate artificial intelligence in cognitive radio based communication system. This paper introduces multilayer feed-forward neural network (MFNN) for spectrum sensing to detect the primary users. This in turn would enable the detector to identify the vacant bands that are devoid of primary users. As the accuracy of detection depends on the structure of the network and on the learning algorithms, an MFNN is trained with different back propagation algorithms varying the number of hidden neurons to find out the best suitable structure of the MFNN for spectrum sensing in different conditions of the wireless channel. Distinct cyclostationary features of different primary users are extracted to generate the input feature vectors for the MFNN as these features are well accepted for signal detection in low signal-to-noise ratio (SNR). The False Alarm Rate (FAR) of the detector is also evaluated with SNR and multipath delay. Simulation results prove that MFNN is suitable for designing a highly robust vacant band detector in the time varying wireless channel as it provides low and almost constant FAR in high multipath delay and low SNR RF environment.

Index Terms*: *Back propagation algorithms, cognitive radio, false alarm rate, multilayer feed forward neural network, spectrum sensing.

I. INTRODUCTION

Spectrum sensing is a crucial task in the field of cognitive radio to optimize the use of precious licensed and as well as unlicensed frequency band. Cognitive radio is defined as the radio system, which gathers RF information from the surroundings to send the information in the vacant bands or spectrum holes by modifying its operational parameters such as frequency, modulation schemes and transmission power [1], [2], [3]. For efficient utilization of spectrum, CR should sense the transmission of the primary signal correctly to making sure that no transmission occurs from the Primary User and adjust its parameters accordingly to send the information through the spectrum hole. Cyclostationary based signal classification and detection technique is well accepted in the low signal to noise (SNR) environment [4], [5], [6]. In this approach the signals are classified by analyzing the cyclic frequency domain. The most commonly used mobile radio signals are digital modulated and they have certain hidden periodicity property that produce distinct cyclostationary features.

Manuscript Received August, 2013.

Prof. S. Roy Chatterjee, Department of Electronics and Communication Engineering, Netaji Subhas Engineering College, Kolkata, India.

Mr. R. Mandal , Department of Electronics and Communication Engineering Netaji Subhas Engineering College, Kolkata, India.

Dr. M. Chakraborty, Department of Information Technology, Institute of Engineering and Management, Kolkata, India

Conventional approaches to cyclic spectral analysis classify signals where the carrier frequency and bandwidths are unknown but they are computationally complex and require large amount of data to be processed which leads to increase in observation time to minimize the misclassification rate. To reduce the large amount of data, only the highest value of the spectral correlation density (SCD) function for a given cyclic frequency resolution is estimated to detect the presence of signal at a particular frequency band but this leads to increase the false alarm rate of signal detection and misclassification rate. In practical situations however, the number of observation samples is limited. Therefore, the spectral correlation needs to be estimated from a finite set of samples. Knowledge based methodology can make it usable for practical usage and computational complexity may be manageable by using efficient algorithms like the FFT Accumulation Method (FAM) [5], [7]. Hence a supervised Artificial Neural Network (ANN) may be integrated with the cyclostationary signal processor to enhance the reliability of the mobile radio signal detector with appropriate classification of primary signals [4], [8], [9],[10]. An artificial neuron is a computational unit that is inspired in the natural neurons and interconnection of them provides an ANN [11], [12]. The decision making process of ANN based on input features vectors, is holistic and this may be used to identify different mobile radio signals. Distinct cyclostationary features of different mobile radio signals may be used to train an ANN to classify them and detect the presence of a mobile radio signal in a particular frequency band in RF surrounding which would provide the spectrum holes. A Multilayer Feed-forward Neural Network (MFNN) is well accepted as feature classifier due to its lower complexity and ability to produce satisfactory result for non-linear relationships. But accuracy of detection depends on the structure of the network and on the learning algorithms [12], [13], [14], [15].

An MFNN may be trained to give reasonable output when presented with inputs that they have never seen and this makes it suitable in real-time operation. The most crucial aspect is to optimize an MFNN to produce satisfactory accuracy level with appropriate classification efficiency for nonlinear relationship. There is no single best method for nonlinear optimization. So an MFNN is trained with different back propagation algorithms and analyzed to optimize the neural network with respect to the number of neurons in the hidden layer and the type of algorithm used to obtain most suitable MFNN for mobile signal classifier in different RF environment. A primary signal detector is designed and tested using MATLAB 7.11.0.584 (R2010b) in wireless scenarios where either noise exists or multipath delay exists or both (noise as well as delay) exist, to

evaluate the performance in highly varying wireless RF environment. The characteristics of primary signals and system framework to optimize the detector in wireless environment are shown in Table I and Figure1respetively.

TABLE I
CHARACTERISTICS OF PRIMARY SIGNALS

Transmitter	Modulation Scheme	Symbol Rate (MHz)	Carrier Frequency (MHz)	Processing Gain	Number of sub carriers
Tx_1	GMSK	1	4		
Tx_2	8FSK	0.5	8		
Tx_3	8PSK	2	6		
Tx_4	16QAM	0.4	1		
Tx_5	DSSS With BPSK	1	2	2	
Tx_6	OFDM with 16QAM	0.1	10		48

The workflow of analysis is as follows.

i) *Generation of primary signals*: Transmitters (Tx_n, where n=1…6) are designed to generate six different primary signals of different carrier frequencies with different modulation scheme. Signal characteristics of different primary signals are listed in Table-I. The modulation schemes which are the most widely accepted ones in mobile communications are used for primary signals.

ii) *Different models of wireless channels*: All the primary signals are passed through a wireless channel. Different RF environment of the channel are taken as follows.
- Additive White Gaussian Noise (AWGN) Channel
- Multipath Channel with Rayleigh fading
- Multipath Channel with both AWGN and Rayleigh fading

iii) *Design of MFNN based primary signal detector*: The steps are as follows.
- Preprocessing: Several cyclostationary features (S_1, S_2, S_3, S_4, S_5, S_6, S_7) are extracted by using cyclic spectral analysis techniques varying SNR from -10dB to 10dB for AWGN and delay $1x10^{-4}$ µs to 10 µs for multipath channel.

Training and learning: Signal feature vectors for different channel models are taken to train a feed forward neural network with different learning algorithms varying hidden neuron to find out the best suited ANN for mobile radio signal classification and detection for different condition of wireless channel.

The organization of the paper is as follows. After the introduction in section I, section II provides a brief theoretical background of cyclostationary signal processing followed by the simulation of cyclostationary feature extraction. Section III describes an overview of ANN and different back propagation algorithms that have been used for comparison. Section IV represents different simulation scenarios of RF environment for optimization followed by simulation results. Section V Section concludes the paper with some highlights on future works.

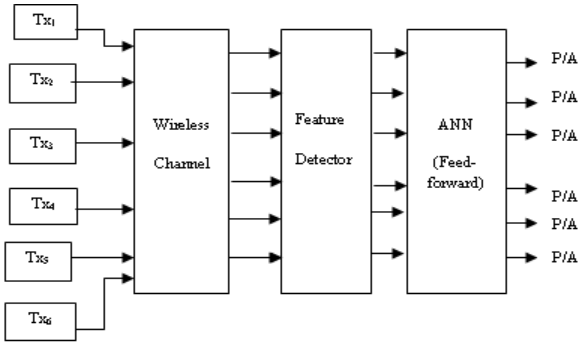

Figure 1 System framework

II. OVERVIEW OF CYCLOSTATIONARY SIGNAL PROCESSING AND FEATURE EXTRACTION

A. Overview of Cyclostationary Signal Processing

The idea behind the theory of cyclostationary spectrum sensing is that the different mobile radio signals exhibit cyclostationarity.As introduced by Gardner, the second order cyclostationarity uses quadratic non-linearities to extract sine-waves from a signal [16], [17]. A continuous-time signal *x(t)* is said to be cyclostationary (in wide sense), if it exhibits a periodic auto-correlation function which is given by

$$R_x(t,\tau) = E[x(t)x^*(t-\tau)] \qquad (1)$$

where, E[.] represents statistical expectation operator. Since $R_x(t,\tau)$ is periodic, it has the Fourier series representation

$$R_x(t,\tau) = \sum_{\alpha} R_x^{\alpha}(\tau)e^{j2\pi\alpha t} \qquad (2)$$

Where summation is taken over integral multiples of fundamental cycle frequencies, α. The term $R_x^{\alpha}(\tau)$ is known as cyclic auto-correlation function, which is defined in in the equation (3)

$$R_x^{\alpha}(\tau) = \lim_{T\to\infty}\frac{1}{T}\int_{-\frac{T}{2}}^{\frac{T}{2}} R_x(t,\tau)e^{-j2\pi\alpha t}\,dt \qquad (3)$$

Therefore, a signal exhibits second-order cyclostationarity in the wide-sense when its cyclic auto-correlation function, $R_x^{\alpha}(\tau)$ is different from zero for some non-zero frequency α, where α indicates cyclic frequency.

If the signal *x(t)* exhibits cyclostationarity with cyclic frequency in time domain, then it also exhibits spectral correlation at shift α in frequency domain. The SCD function is very useful to determine the amount of correlation between frequency shifted versions of *x(t)* in the frequency domain. It is defined as the Fourier transform of cyclic auto-correlation function of *x(t)* which is shown in equation (4).

$$S_x^{\alpha}(f) = \int_{-\infty}^{\infty} R_x^{\alpha}(\tau)e^{-j2\pi f\tau}\,dt \qquad (4)$$

Signals usually exhibit distinctive features in SCD domain that help to detect the presence of those signals.

B. Feature Extraction

Distinct cyclostationary features are extracted analyzing the α and *f* domain of different primary signals generated by the transmitters. The feature

parameters almost insensitive to signal to noise ratio as given in Table-II are selected as feature vectors to train the neural network. Selected features of the signals are extracted for different channel conditions varying SNR and multipath delay. The features are then normalized to avoid numerical computational error by subtracting mean of each feature form the original feature and dividing the result by the standard deviation of the same feature. Table-III represents an example scenario of the calculated normalized feature vectors for AWGN channel with SNR value of 2dB.

III. OUTLINE OF ANN AND BACK PROPAGATION ALGORITHM

ANN comprises of biologically inspired networks consisting of large number of artificial neurons in a network structure. Inter-neuron connections are called synapses. Each synapse is associated with a synaptic weight. These weights are used to store knowledge which is acquired from the environment. An artificial neuron is well described mathematically by binary threshold unit according to computational model of McCulloch and Pitts4 as shown in Figure 2 [11].

TABLE II
FEATURE PARAMETERS

Features	Description
S_1	Frequency of peak at α-domain
S_2	Frequency of peak at f-domain
S_3	Maximum value of peak on α-domain
S_4	Maximum value of peak on f-domain
S_5	Number of peaks (f=0) at α-domain
S_6	Number of peaks (α=0) at f-domain
S_7	Energy of the signals at α-domain

TABLE III
THE NORMALIZED VALUE OF THE FEATURES FOR SNR OF 2 dB

	GMSK	8FSK	8PSK	16QAM	DSSS	OFDM
S_1	0.7345	1.9448	0.0667	-0.3171	-0.246	1.9239
S_2	0.7389	1.9536	0.0687	-0.3166	-0.245	1.9117
S_3	1.0293	1.0711	1.0747	1.0711	0.9794	0.4353
S_4	0.9574	0.9574	0.9574	0.9574	0.9574	0.9574
S_5	0.9209	-0.494	0.1103	0.0989	1.4689	2.1653
S_6	0.8246	-0.298	1.3103	1.2799	1.0675	1.0675
S	-0.550	-1.765	-1.057	-0.4519	1.2974	1.3967

This computes a weighted sum of its n input signals, s_i *(where* $i = 1, 2, \ldots, n$*)* and generates an output of logic one if this sum is above a certain threshold *'u'*, otherwise, an output of logic zero. Mathematically,

$$y = \theta\left\{\sum_{i=1}^{n}(w_i * s_i) - u\right\} \qquad (5)$$

where $\theta\{.\}$ is a unit step function at 0, and w_i is the synapse weight associated with the ith input.

Based on the connection pattern, ANN can be grouped into two categories: *feed-forward network* and *recurrent network* [11], [14].

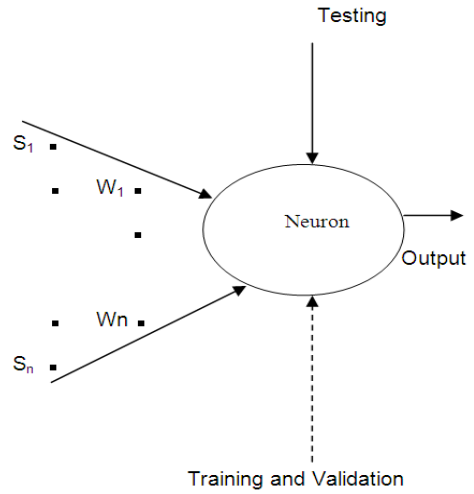

Figure 2 McCulloch-Pitts model of a neuron

In feed-forward networks, neurons are organized into layers that have unidirectional connections between them. It is also referred as multilayer perception in which graphs have no loop and in recurrent networks loops occur because of feedback connections.

In feed-forward network, each input neuron broadcast the received input signal to the each of the hidden units. Each hidden units then computes its activation & sends it to each output unit. Each output unit computes its activation to form the response of the network for the given input pattern. The neurons in the input layer only act as buffers for distributing the input signals s_i to neurons in the hidden layer. Each neuron j in the hidden layer sums up its input signals s_i after weighting them with the strengths of the respective connections W_{ij} from the input layer, and computes its output, y_i as a function f of the sum as given in equation (6).

$$yi = f\left(\sum w_{ij}\, s_j\right) \qquad (6)$$

where f is the activation function that is necessary to transform the weighted sum of all signals impinging onto a neuron. The output of the neurons in the output layer is similarly computed. A learning algorithm gives the change $\Delta w_{ij}(t)$ in the weight of a connection between neurons i and j at time t so that a network can efficiently perform a specific task.

The network has two modes of operation; the *training mode* with *validation* and the *testing mode*. Once the network weights and biases are initialized, the network is ready for training. The training process requires a set of network inputs and corresponding target outputs. During training the weights and biases of the network are iteratively adjusted to minimize the network performance function. The performance function for feed forward networks is mean square error (MSE) which is the average squared error between the network outputs and the target outputs.

The training adjusts the connection's weights accordance with a learning algorithm, after obtaining an output from the network and comparing it with a wished output. In the testing mode data set are used to measure the performance of the network after the training.

In back propagation training algorithm, the training begins with random weights and each output unit computes error function during training that is

used to adjust the weight to each neuron [12], [18]. It is also known as steepest descent algorithm as it uses the gradient of the performance function to determine the change in weights to minimize the performance function. Equation (7) stands for the one step of iteration of back propagation algorithm.

$$W_{k+1} = W_k - \alpha\, g_k \qquad (7)$$

where W_{k+1} is the new update weight vector, α is the learning parameter and g_k is the current gradient.

The MFNN structure for mobile radio signal classification considering ten hidden neurons is shown in Figure 3. It consists of input layer, one hidden layer and output layer. In the input layer seven neurons represent different cyclostationary features and six neurons in the output layer represent output for different primary signals. It produces an output of logic one when the primary signal is presents at that particular band and zero when that band is vacant.

The feed-forward network as shown in Figure 3 is trained with the different back propagation algorithms considering tansigmoidal function as the activation function. The performance of the network is evaluated varying the number of hidden neurons for each learning algorithm to find the best suitable network structure. The weight values are also reinitialized and retrained the network to minimize the obtained MSE for each set of hidden neurons.

The well accepted back propagation algorithms which are used to train the mobile radio classifier are as follows [18], [19], [20].

a) Variable Learning Rate
b) Resilient Back Propagation(RP)
c) Polak-Ribiere Conjugate Gradient
d) Quasi-Newton Algorithms
e) Levenberg-Marquardt (LM)

In the conventional steepest descent algorithms, the learning rate set at a constant value throughout the training. But it is very crucial aspect to select a proper value of learning rate. It is also not realistic to determine the optimal setting for the learning rate before training. The performance of the steepest descent algorithm is enhanced in variable learning rate algorithm by changing the learning rate during the training process. It keeps the learning step size as large as possible maintaining the stable learning.

The RP training algorithm eliminates the negative effect of using sigmoid transfer functions which have slopes characteristic such that it approach to zero as the input gets large slope characteristic .The steepest descent algorithms come across a difficulty when it is used to train a multilayer network with sigmoid functions as the gradient can have a very small magnitude that cause small changes in the weights and biases, even though the weights and biases are far from their optimal values. The RP training algorithm eliminates these negative effects of the magnitudes of the partial derivatives. This algorithm determines the direction of the weight update from the sign of the derivative whereas the magnitude of the derivative has no effect on the weight update.

The weight is increased whenever the derivative of the performance function with respect to that weight has the same sign for two successive iterations and is decreased whenever the derivative with respect to that weight changes sign from the previous iteration.

Standard back propagation algorithms usually have poor convergence rate which often behaves very badly on large-scale problems. Conjugate gradient algorithms are one class of optimization methods that are able to handle large-scale problems in an effective way.

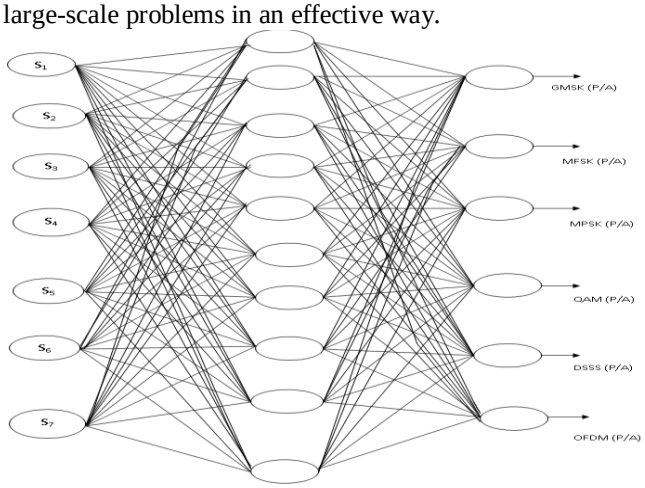

Figure 3 MFNN for mobile radio signal classification

This class of algorithms performs a line search along the conjugate directions that produces generally faster convergence than the steepest descent directions and the search direction will be periodically reset to the negative of the gradient. Initially all the conjugate gradient algorithms start out by searching along the steepest descent direction on the first iteration and then a line search is performed for determination of the optimal distance. Equations (8), (9), (10) represent respectively the initial condition of line search, determination of new search direction and the weight update formula for the conjugate gradient algorithms.

$$P_o = -g_o \qquad (8)$$

$$P_k = -g_k + \beta_k P_{k-1} \qquad (9)$$

$$W_{k+1} = W_k + \alpha_k p_k \qquad (10)$$

Different computational formulas are used to find out the constant β_k . For the Polak-Ribiére update, the constant β_k is computed by the equation (11)

$$\beta_k = \frac{\Delta g_{k-1}^T g_k}{g_{k-1}^T g_{k-1}} \qquad (11)$$

This class of algorithms is computationally expensive as the network response is computed several times for each line search. Another version of conjugate gradient algorithm know as scaled conjugate gradient(SCG) avoids the line-search per learning iteration by using a Levenberg-Marquardt approach in order to scale the step size. It combines the model-trust region approach used in the Levenberg-Marquardt algorithm with the conjugate gradient approach.

Newton's method is accepted as an alternative to the conjugate gradient method for fast optimization as it frequently generate fast convergence than conjugate gradient methods. Here the updated value of the weight is calculated using the Hessian matrix of the performance index and the current weight w_k as represented by the equation (12).

$$W_{k+1} = W_k - A_k^{-1}\, g_k \qquad (12)$$

where A_k is the Hessian matrix of the performance index at the current values of the weights and biases. When A_k is large, it is complex and time consuming to compute w_{k+1}. Fortunately the quasi-Newton methods do not require intensive calculation although they are formulated from the Newton's method.

In quasi-Newton methods, instead of the true Hessian, an initial matrix is chosen which is subsequently updated by using an appropriate update formula. Broyden-Fletcher-Goldfarb-Shanno (BFGS) update formula has received wide acceptance as it produce superior performance than the other available algorithms.

The LM algorithm was designed to support second-order training speed without having to compute the Hessian matrix (H). It updates the weight using Jacobian matrix that can be computed through a standard back propagation technique which is much less complex than computing the Hessian matrix. The weight update formula accordingly the LM algorithm is represented by the equation (13).

$$W_{k+1} = W_k - [J^T J + \alpha I]^{-1} J^T e \qquad (13)$$

where J is the Jacobian matrix that contains first derivatives of the network errors with respect to the weights and biases, and e is a vector of network errors.

IV. EVALUATION OF CLASSIFICATION EFFICIENCY OF DIFFERENT LEARNING ALGORITHMS IN DIFFERENT SCENARIOS OF RF ENVIRONMENT

A. *Scenario I*

Transmitters are designed to transmit different digital modulated primary signals with different carrier frequency as specified in the workflow and the wireless channel characteristic is taken as AWGN.

Table IV shows the result of simulation which indicates that different learning algorithms demand different network structures and provide different values of classification accuracy (CA). However, accuracy alone does not completely describe the classification efficiency of the MFNN models.

The other means of evaluating the classification efficiency is receiver operating characteristics (ROC) curve. It can be represented by plotting the fraction of true positives also called true positive rate (TPR) versus the fraction of false positives called false positive rate (FPR). An ROC analysis provides tools to select possible optimal models and discard suboptimal ones. The area under the ROC curve (AUC) is used to reduce ROC performance to a single scalar value representing the expected performance. AUC is suitable for comparing two sets of classifiers for a particular task. AUC_n (n=1, 2,…6) represent AUC for primary signals 1 through 6.

Table-IV summarizes the evaluated AUC of different primary signals for different back propagation algorithms in AWGN channel. The result shows that all the algorithms can classify different types of the primary signal satisfactorily except BFGS Quasi-Newton Algorithm.

It also shows that LM algorithm has a need of less number of hidden neurons with the performance accuracy higher than other algorithms. The performance of RP and scaled conjugates algorithms are very close to LM but RP needs higher number of hidden neurons.

TABLE IV
PERFORMANCE EVALUATION IN AWGN CHANNEL

Algorithm	N_H	CA (%)	AUC_1	AUC_2	AUC_3	AUC_4	AUC_5	AUC_6
LM	10	94.5	1	1	1	1	1	0.9
BFGS Quasi-Newton	cannot be classified							
RP	12	90.5	1	1	1	1	0.9	1
Variable learning rate	16	87.5	1	1	1	1	1	0.9
Polak-Ribiere Conjugate Gradient	24	93.1	1	1	1	1	0.7	0.55
Scaled Conjugate Gradient	24	90.3	1	1	0.8	1	1	0.95

TABLE V
PERFORMANCE EVALUATION IN MULTIPATH CHANNEL

Algorithm	N_H	CA(%)	AUC_1	AUC_2	AUC_3	AUC_4	AUC_5	AUC_6
LM	10	99	0.96	1	1	1	1	1
BFGS Quasi-Newton	12	98.90	1	0.60	1	0.74	1	0.59
RP	14	98.5	1	0.97	0.97	0.97	0.95	1
Variable learning rate	18	94.5	1	1	0.95	0.99	0.99	1
Polak-Ribiere Conjugate Gradient	20	98.5	0.93	0.99	1	1	1	0.19
Scaled Conjugate Gradient	16	99.2	1	1	1	1	1	1

B. *Scenario II*

In multipath channel with Rayleigh fading, all the back propagation algorithms give satisfactory classification efficiency as shown in Table V but the Polak-Ribiere Conjugate Gradient algorithm gives the AUC for OFDM signal 0.19 which is not acceptable.

C. *Scenario III*

It is a very critical situation for the signal classifier to classify and detect received signals when they exhibit same carriers. Table VI shows the performance of different back propagation algorithms when all the primary signals are of same carriers of 4MHz and passed through the AWGN channel. Performance efficiency is decreased for all the algorithms as shown in the Table VI and MFNN trained with BFGS Quasi Newton algorithm and Polak Ribiere Conjugate Gradient algorithm are unable to classify the primary signals.

D. *Scenario IV*

To find out the generalization capability of the signal classifier, the performance is evaluated for a multipath wireless channel with both AWGN and Rayleigh fading. Input features of the primary users for MFNN are extracted for -10dB to 10dB of SNR varying the multipath delay zero to 10 µs. An ANN trained with RP algorithm only gives the acceptable performance efficiency as shown in Table VII. So this is considered as the

best structure of the MFNN for signal detector in highly varying RF environment. In wireless channel the noise variance and Rayleigh fading cause the false alarm. So the variation of the FAR of the MFNN based primary signal detector with the noise variance and multipath delay are analyzed. The results are summarized in Figure 4 and Figure 5. Note that MFNN based signal detector provides almost constant and low FAR up to the SNR value of -2dB and multipath delay 5μs for the different primary signals except 8PSK.

TABLE VI
PERFORMANCE EVALUATION IN AWGN CHANNEL FOR PRIMARY SIGNALS ARE HAVING SAME CARRIER

Algorithm	N_H	CA(%)	AUC_1	AUC_2	AUC_3	AUC_4	AUC_5	AUC_6
LM	14	86.1	0.9	1	0.75	1	1	0.9
BFGS Quasi-Newton	cannot be classified							
RP	12	86.1	0.8	0.8	0.9	1	1	0.95
Variable learning rate	10	80.6	0.5	0.75	0.9	1	1	1
Polak-Ribiere Conjugate Gradient	cannot be classified							
Scaled Conjugate Gradient	12	86.1	0.7	0.85	0.85	1	1	1

TABLE VII
PERFORMANCE EVALUATION OF THE BEST SUITABLE MFNN IN WIRELESS CHANNEL

Algorithm	N_H	CA (%)	AUC_1	AUC_2	AUC_3	AUC_4	AUC_5	AUC_6
RP	12	83.1	0.80	0.97	0.80	0.96	0.98	0.97

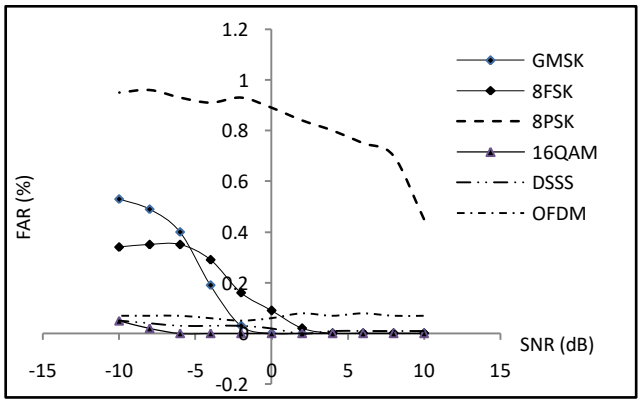

Figure 4 Variation of FAR of the MFNN based primary signal detector with SNR

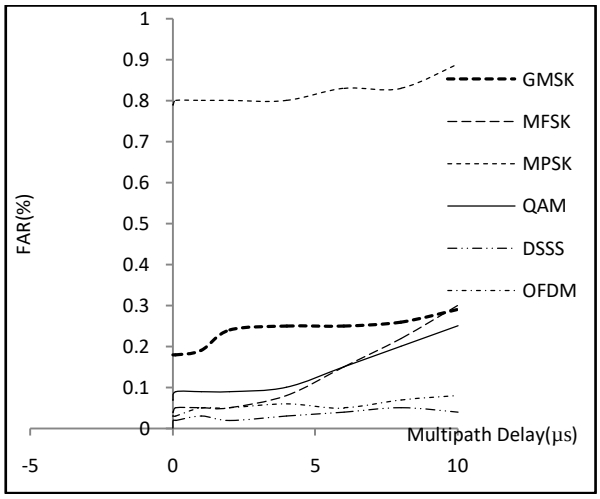

Figure 5 Variation of FAR of the MFNN based primary signal detector with multipath delay

V. CONCLUSION

Here the performance of different back propagation algorithms are analyzed for the MFNN based primary signal detector for CR varying the number of hidden neuron to find out the best suitable structure of MFNN in wireless channel. Simulation results show that MFNN based primary signal detector is highly robust in the time varying RF environments as it is capable of detecting the primary signals in different conditions of wireless channel and also provide almost constant and low FAR. In future higher order cyclostationary features would be incorporated to minimize the FAR for higher order modulation schemes.

REFERENCES

1. Tevfik Y¨ucek and H¨useyin Arslan,"A Survey of Spectrum Sensing Algorithms for Cognitive Radio Applications", IEEE Communications Surveys & Tutorials, vol. 11, no. 1, first quarter 2009.
2. Shahzad A. Malik, Madad Ali Shah, Amir H. Dar, Anam Haq, Asad Ullah Khan, Tahir Javed, Shahid A. Khan, "Comparative Analysis of Primary Transmitter Detection Based Spectrum Sensing Techniques in Cognitive Radio Systems, Australian Journal of Basic and Applied Sciences, 4(9): 4522-4531, 2010.
3. Ian F. Akyildiz, Won-Yeol Lee and Mehmet C. Vuran and Shantidev Mohanty," NeXt generation/dynamic spectrum access/cognitive radio wireless networks: A survey ",Computer Networks 50 (2006) 2127–2159
4. Fehske, A., Gaeddert, J.; Reed, J., "A New Approach to Signal Classification Using Spectral Correlation and Neural Networks", Proceedings of First IEEE International Symposium on New Frontiers in Dynamic Spectrum Access Networks, 2005. (DySPAN 2005), pp 144-150.
5. D .Sutton, K.E. Nolan,L.E. Doyle," ,Cyclostationary Signatures in Practical Cognitive Radio Applications" IEEE Journal on Selected Areas in Communications, Vol: 26 , Issue: 1 pp.13 - 24 ,January 2008
6. Kyouwoong Kim ,Akbar, I.A.,Bae, K.K., Jung-Sun Um, Spooner, C.M.; Reed, J.H. "Cyclostationary Approaches to Signal Detection and Classification in Cognitive Radio", Proceedings of 2nd IEEE International Symposium on New Frontiers in Dynamic Spectrum Access Networks, 2007. (DySPAN 2007), pp 212-215.
7. Randy S. Robert, William A Brown and Herschel H. Loomis, "Computationally Efficient Algorithms for Cyclic Spectral Analysis", in IEEE signal Processing MagazineApril,1991
8. Zhenyu Zhang, Xiaoyao Xie "Intelligent Cognitive Radio: Research on Learning and Evaluation of CR Based on Neural Network" Proceedings of ITI 5th International conference on Information and Communications Technology, 2007(ICICT,2007),pp 33 – 37.
9. C.Clancy, J. Hecker, E. Stuntebeck and T. O'Shea, "Applications of Machine Learning to Cognitive Radio Networks", Wireless Communications, IEEE , vol: 14, pp: 47 – 52, 2007
10. Yu-JieTang,Qin-yu Zhang,Wei Lin,"Artificial Neural Network Based Spectrum Sensing Method for Cognitive Radio" Proceedings of 6th International Conference on Wireless Communications Networking and Mobile Computing (WiCOM),2010,pp.1-4
11. Anil K. Jain, Jianchang Mao, K.M. Mohiuddin, "Artificial Neural Network: A Tutorial", IEEE Computer, Vol. 29 (Mar 1996)pp. 31 – 44.
12. A. Bhavani Sankar, D. Kumar, K. Seethalakshmi, "Neural Network Based Respiratory Signal Classification Using Various Feed-Forward Back Propagation Training Algorithms" , European Journal of Scientific Research , Vol.49 No.3 (2011), pp.468-483.
13. S. Jadhav, S. Nalbalwar, A. Ghatol, "Performance Evaluation of Generalized Feed forward Neural Network Based ECG Arrhythmia Classifier" , IJCSI International Journal of Computer Science Issues, Vol. 9, Issue 4, No 3, July 2012
14. Rivero. Daniel, Dorado. Julián, Rabuñal. Juan R.,Pazos. Alejandro, "Evolving simple feed-forward and recurrent ANNs for signal classification: A comparison", Proceedings of International Joint Conference onNeural Networks, 2009, IJCNN 2009, pp. 2685-2692.

15. Chuan-Yu Chang, Yong-Cheng Hong,Pau-Choo Chung, Chin-Hsiao Tseng,"A Neural Network for Thyroid Segmentation and Volume Estimation in CT Images "IEEE Computational Intelligence Magazine, November2011
16. Gardner, W.A. , "An Introduction to Cyclostationary Signals, Chapter 1, Cyclostationarity in Communications and Signal Processing", IEEE Press,Piscataway,NJ,1993.
17. Gardner, W.A. Brown and C.K.Chen , "Spectral Correlation of Modulated Signals" Part 2 –Digital Modulation, IEEE Transcations and Communications. Jun 1987, vol. 35, Issue 6, pp-595-601.
18. Mark Hudson Beale, Martin T. Hagan, Howard B. Demuth, 2010. "Neural Network Toolbox 7-User's Guide, The Math Works Inc".
19. Mohammed A. Ayoub, Birol M. Demiral,"Application of Resilient Back-Propagation Neural Networks for Generating a Universal Pressure Drop Model in Pipelines" UofKEJ ,Vol. 1 ,Issue 2 pp. 9-21,October 2011
20. T. Pradeep, P.Srinivasu, P.S.Avadhani andY.V.S. Murthy,"Comparison of variable learning rate and Levenberg-Marquardt back-propagation training algorithms for detecting attacks in Intrusion Detection Systems", International Journal on Computer Science and Engineering (IJCSE) , vol. 3, no. 11(2011)

AUTHOR PROFILE

Prof. S. Roy Chatterjee presently holds the post of assistant professor in the department of Electronics & Communication Department in Netaji Subhash Engineering College, Kolkata, India. She completed her B.Tech (2004) and M.Tech (2006) from the department of Applied Physics, Calcutta University. Her research interests include communication, networking and cognitive radio. She has published three international journals.

Mr. R. Mandal has done his B.Tech (2011) and pursuing M.Tech in Electronics & Communication Engineering from Birbhum Institute of Engineering & Technology, Kolkata, India and Netaji Subhas Engineering College, Kolkata, India respectively. He is presently carrying out his M.Tech thesis in the area of cognitive radio.

Dr. M. Chakraborty presently holds the post of professor and Head of the Department of Information Technology, Institute of Engineering & Management, Kolkata, India. She has done her PhD (Engg) in the field of mobile communication and networking from Jadavpur University (2007), Kolkata, India. Prior to that, she completed her BTech (1994) and MTech (2000) from the Institute of Radio Physics & Electronics, Calcutta University. Her research areas of interest include cryptographic techniques for network security, network intrusion detection and prevention techniques, sensor networks and cognitive radio. She has authored more than forty international journals and conference papers.