Shortcut Tree Routing Algorithm for Efficient Data Delivery in ZigBee Wireless Networks

Sharmilaa. S, Jagadeesan. A, Sathesh Kumar.T

Abstract*— The ZigBee tree routing is widely used in many resource-limited devices and applications, since it does not require any routing table and route discovery overhead to send a packet to the destination. However, the ZigBee tree routing has the fundamental limitation that a packet follows the tree topology; thus, it cannot provide the optimal routing path. In this paper, we propose the shortcut tree routing protocol that provides the near optimal routing path as well as maintains the advantages of the ZigBee tree routing such as no route discovery overhead and low memory consumption. The main idea of the shortcut tree routing is to calculate remaining hops from an arbitrary source to the destination using the hierarchical addressing scheme in ZigBee, and each source or intermediate node forwards a packet to the neighbor node with the smallest remaining hops in its neighbor table. The shortcut tree routing is fully distributed and compatible with ZigBee standard in that it only utilizes addressing scheme and neighbor table without any changes of the specification. The mathematical analysis proves that the 1- hop neighbor information improves overall network performances by providing an efficient routing path and distributing the traffic load concentrated on the tree links. In the performance evaluation, we show that the shortcut tree routing achieves the comparable performance to AODV with limited overhead of neighbor table maintenance as well as overwhelms the ZigBee tree routing in all the network conditions such as network density, network configurations, traffic type, and the network traffic.

Keywords:- ZigBee, Shortcut tree routing, Neighbor table, AODV.

I. INTRODUCTION

ZigBee is a worldwide standard of wireless personal area network targeted to low-power, cost-effective, reliable, and scalable products and applications. Different from the other personal area network standards such as Bluetooth, UWB, and Wireless USB, ZigBee provides the low power wireless mesh networking and supports up to thousands of devices in a network. Based on these characteristics, ZigBee Alliance has extended the applications to the diverse areas such as smart home, building automation, health care, smart energy, telecommunication, and retail services. The ZigBee network layer, which is the core of the standard, provides dynamic network formation, addressing, routing, and network management functions. ZigBee supports up to 64,000 devices in a network with the multi- hop tree and mesh topologies as well as star topology. Every node is assigned a unique 16 bit short address dynamically using either distributed addressing or stochastic addressing scheme. The routing protocols of ZigBee are diverse so that a system or users can choose the optimal routing strategy according to the applications.

Manuscript received March, 2014.

Sharmilaa.S, Department of Embedded Systems, PRIST University, India.

Jagadeesan.A, Department of Embedded Systems, PRIST University, India.

Satheshkumar.T, Department of Embedded Systems, PRIST University, India.

The reactive routing protocol in ZigBee is derived from AODVjr (AODV junior), which is one of the representative routing protocols in MANET (Mobile Ad-hoc Networks). Similar with other MANET routing protocols, ZigBee reactive routing protocol provides the optimal routing path for the arbitrary source and destination pair through the on-demand route discovery. It requires the route discovery process for each communication pair, so the route discovery overhead and the memory consumption proportionally increases with the number of traffic sessions. Moreover, route discovery packets are flooded to the overall network, which interfere with transmission of other packets even in the spatially uncorrelated area with the route discovery.

On the other hand, ZigBee tree routing (ZTR) prevents the route discovery overhead in both memory and bandwidth using the distributed block addressing scheme. In ZTR, since each node is assigned a hierarchical address, a source or an intermediate node only decides whether to forward a packet to the parent or one of the children by comparing its address with the destination address. The most benefit of ZTR is that any source node can transmit a packet to an arbitrary destination in a network without any route discovery overheads. Due to this efficiency, ZTR is considered as a promising protocol for resource constrained devices in diverse applications such as smart grid project and Internet of Things (IoT). However, in ZTR, packets are forwarded along the tree topology to the destination even if the destination is located nearby. Thus, ZTR cannot provide the optimal routing path, while it does not require any route discovery overhead.

Our objective is to provide the near optimal routing path like the reactive routing protocol as well as to maintain the advantages of ZTR such as no route discovery overhead and little memory consumption for the routing table. We propose the shortcut tree routing (STR) that significantly enhances the path efficiency of ZTR by only adding the 1-hop neighbor information. Whereas ZTR only uses tree links connecting the parent and child nodes, STR exploits the neighbor nodes by focusing that there exist the neighbor nodes shortcutting the tree routing path in the mesh topology. In other words, in STR, a source or an intermediate node selects the next hop node having the smallest remaining tree hops to the destination regardless of whether it is a parent, one of children, or neighboring node. The routing path selection in STR is decided by individual node in a distributed manner, and STR is fully compatible with the ZigBee standard that applies the different routing strategies according to each node's status. Also, it requires neither any additional cost nor change of the ZigBee standard including the creation and maintenance mechanism of 1-hop neighbor information. The main contributions of this paper are as follows.

First, we propose STR to resolve the main reasons of overall network performance degradation of ZTR, which are the detour path problem and the traffic concentration problem. Second, we prove that the 1-hop neighbor nodes used by STR improve the routing path efficiency and alleviate the traffic load concentrated on tree links in ZTR. Third, we analyze the performance of ZTR, STR, and AODV by differentiating the network conditions such as network density, ZigBee network constraints, traffic types, and the network traffic.

II. ZIGBEE TREE ROUTING (ZTR)

ZTR is designed for resource constrained ZigBee devices to choose multi-hop routing path without any route discovery procedure, and it works based on hierarchical block addressing scheme described in Eq. (1) and (2).

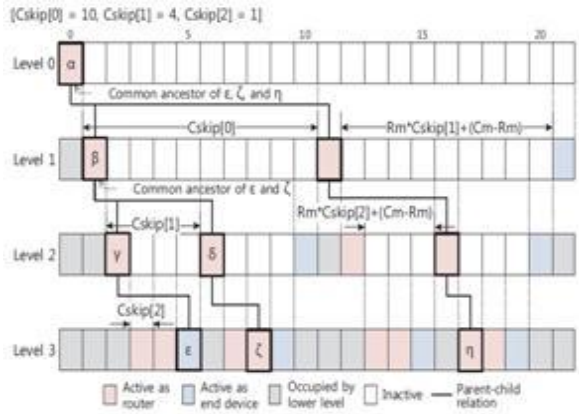

Fig. 1. ZigBee address structure and parent-child relationship (Cm 3, Rm 2, and Lm 3)

Fig. 1 shows an example of the ZigBee address assignment scheme and the address hierarchy when *Cm* (nwkMaxChildren), *Rm* (nwkMaxRouters) , and *Lm* (nwkMaxDepth) are given with 3, 2, and 3 respectively. *Cm*, *Rm*, and *Lm* are defined as the maximum number of children a parent may have, the maximum number of routers a parent may have as children, and the maximum tree level of a network in ZigBee standard, respectively.

$$Cskip(d) = \begin{cases} 1 + Cm\,(Lm - d - 1) & ,if\ Rm = 1 \\ \frac{1 + Cm - Rm - Cm\,.\,Rm^{Lm-d-1}}{1 - Rm} & ,otherwise \end{cases} \quad (1)$$

$$A_k = A_{parent} + Cskip(d).(k-1) + 1\ (1 \le k \le Rm)$$

$$A_n = A_{parent} + Cskip(d).Rm + n\ (1 \le n \le Cm - Rm) \quad (2)$$

The *Cskip(d)* in Eq. (1) computes the size of address space assigned by each router node at tree level *d*, and the value of *Cskip(d)* is the same as the amount of *Rm·Cskip(d+1)+(Cm-Rm)+1* in order to cover the address spaces of its router-capable children and end devices. Based on *Cskip(d)*, the network address assignment scheme in Eq. (2) is defined for each kth router-capable child and nth end device given by the parent at tree level *d*. This block addressing scheme pre-allocates the available network address space at each tree level, and the address space is split in a recursive manner as the tree level increases. In other words, each parent node at tree level *d* assigns the *Cskip(d)* size of address space to its router capable child nodes, and its children distribute *Cskip(d+1)* size of address space to their router-capable children again. For example in Fig. 1, the node Ɛ's network address 5 is included in address space [2, 5] of its parent γ at level 2, and [2, 5] is included in the β's address space [1, 10] again.

$$A < D < A + Cskip(d-1) \quad (3)$$

With the hierarchical addressing scheme, we can easily identify whether the destination is descendant of each source or intermediate node. If Eq. (3) is satisfied, the destination with address D is descendant of the node with address A. In ZTR, each source or intermediate node sends the data to one of its children if the destination is descendant; otherwise, it sends to its parent. The example of the routing path of ZTR is described in Fig. 2 (a) and (b), where a packet is routed through several hops towards the destination even though it is within the range of sender's 2-hop transmission range. To solve this *detour path problem* of ZTR, ZigBee specification has defined the *direct transmission rule* that allows a coordinator or a router to transmit a packet directly to the destination without decision of the routing protocol as shown in Fig. 2 (a), if the corresponding destination is in the neighbor table. However, this method cannot fundamentally solve the detour path problem of tree routing, as shown in Fig. 2 (b). In case that the destination is located more than 2-hop distance away from a source node, we cannot apply the *direct transmission rule*.

In addition to the detour path problem, ZTR has the *traffic concentration problem* due to limited tree links. Since all the packets pass through only tree links, especially around the root node, severe congestion and collision of packets are concentrated on the limited tree links. This symptom becomes worse and worse as the number of packets increases, and it finally causes the degradation of the packet delivery ratio, end-to-end latency, and other network performances. A ZigBee network consists of a coordinator and multiple routers and end devices. The network backbone is formed by the coordinator and routers, which must be IEEE 802.15.4 *full function devices (FFDs)*. End devices can only associate with the coordinator or routers and must be *reduced function devices (RFDs)*.

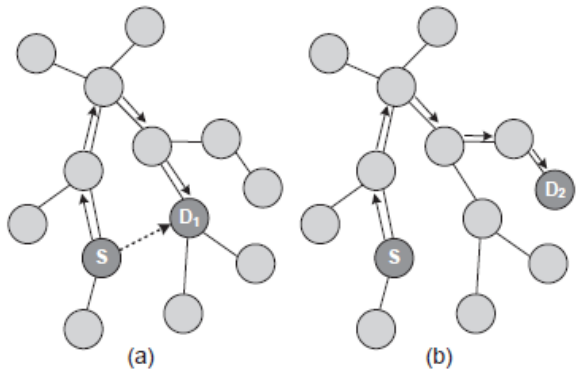

Fig.2. (a), (b) ZigBee tree routing (ZTR)

ZigBee tree routing can operate relying on devices' network addresses, which are assigned by a distributed scheme. When assigning addresses, a coordinator/router can have at most Cm children, among which at most Rm children can be routers. The depth of the network is at most Lm. To assign network addresses, a coordinator/router will be given an address block, which can be partitioned into Rm+ 1 sub blocks. The last block is reserved for its child end devices.

The first Rm sub-blocks are to be assigned to its Rm child routers, each of size Cskip(d), where d is the depth of the node and Address assignment begins from the coordinator by assigning address 0 to itself and depth d = 0. For a node at depth d with address A_{parent}, it will assign address A_{parent} + Cskip(d) × (i − 1) + 1 to its ith child router and address A_{parent} + Cskip(d) × Rm + i to its i-th child end device. An example of the ZigBee addresses assignment. The node c is the ZigBee coordinator and the nodes which have lighter color and darker colors are represented as router nodes and end devices respectively. The Cskip of the ZigBee coordinator can be determined as 31 from Eq. (1) by setting d = 0, Cm = 6, Rm = 4, and Lm = 3. Then the 1st, 2nd, and 3rd child routers of the coordinator will be assigned to addresses 0+(1−1)×31+1 = 1, 0+(2−1)×31+1 = 32, and 0+(3−1)×31+1 = 63, respectively and they are denoted as u, v, and w. There are two end devices associated with the coordinator and their address is 0+4×31+1 = 125 and 0 + 4 × 31 + 2 = 126, respectively.Based on the ZigBee address assignment scheme, the ZigBee network can easily form a tree topology. In tree routing, packets can be easily sent along the tree backbone without using any route discovery. When a node A at depth d receives a packet to node A_{dst}, if A_{dst} is A or one of A's child end devices, the packet can be processed directly. Otherwise, if A < A_{dst} < A + Cskip(d − 1), this packet will be relayed to the child router $A_r = A + 1 + \left[\frac{A_{dst} - (A+1)}{Cskip(d)}\right] X\ Cskip(d)$. Else, the packet will be forwarded to A's parent. Furthermore, given a source A_{src} and a destination A_{dst}, the distance $P(A_{src},A_{dst})$ between them can be computed as follows: $P(A_{src},A_{dst}) = D(A_{src})+D(A_{dst})-2 \times D(LCA(A_{src},A_{dst}))$, where D(A) is the depth of node A, and $LCA(A_{src},A_{dst})$ is the least common ancestor of A_{src} and A_{dst}.

III. SHORTCUT TREE ROUTING

The STR algorithm that solves these two problems of the ZTR by using 1-hop neighbor information. The STR algorithm basically follows ZTR, but chooses one of neighbor nodes as the next hop node when the remaining tree hops to the destination can be reduced. STR computes the remaining tree hops from the next hop node to the destination for all the neighbor nodes, and selects the N4 as the next hop node to transmit a packet to the destination D2. The main idea of STR is that we can compute the remaining tree hops from an arbitrary source to a destination using ZigBee address hierarchy and tree structure as discussed in previous section. In other words, the remaining tree hops can be calculated using tree levels of source node, destination, and their common ancestor node, because the packet from the source node goes up to the common ancestor, which contains an address of the destination, and goes down to the destination in ZTR.

In Existing System**,** ZTR is designed for resource constrained ZigBee devices to choose multi-hop routing path without any route discovery procedure, and it works based on hierarchical block addressing scheme. With the hierarchical addressing scheme, we can easily identify whether the destination is descendant of each source or intermediate node. The destination with address D is descendant of the node with address A. In ZTR, each source or intermediate node sends the data to one of its children if the destination is descendant; otherwise, it sends to its parent. Where a packet is routed through several hop towards the destination even though it is within the range of sender's 2-hop transmission range.

The Drawbacks overcome from Existing system are:

- Detour path problem of ZTR: where a packet is routed through several hops towards the destination even though it is within the range of sender's 2-hop transmission range.
- It cannot provide the optimal routing path: because packet follows the tree topology.
- The ZigBee tree routing network conditions are network density, network traffic occurs degradation problem.
- In addition to the detour path problem, ZTR has the traffic concentration problem due to limited tree links. Since all the packets pass through only tree links, especially around the root node, severe congestion and collision of packets are concentrated on the limited tree links. This symptom becomes worse and worse as the number of packets increases, and it finally causes the degradation of the packet delivery ratio, end-to-end latency, and other network performances.

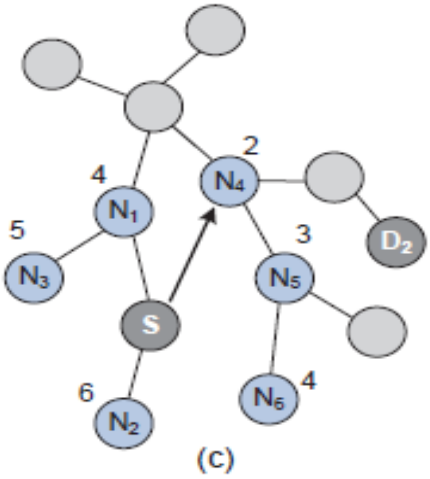

Fig 3 Shortcut Tree Routing

The Proposed concept includes as the shortcut tree routing protocol that provides the near optimal routing path as well as maintains the advantages of the ZigBee tree routing such as no route discovery overhead and low memory consumption. The STR algorithm basically follows ZTR, but chooses one of neighbor nodes as the next hop node when the remaining tree hops to the destination can be reduced. The STR algorithm that solves problems of the ZTR by using 1-hop neighbor information.

A. Advantages

- Using 1 hop neighbor selection based on direct transmission rule in Shortcut tree routing method.
- It reduces the energy consumption and utilizes low memory.
- Didn't occur detour path problem and route discovery process overhead and also a traffic concentration problem.
- To avoid degradation and Hierarchical addressing scheme.

The main idea of STR is that we can compute the remaining tree hops from an arbitrary source to a destination using ZigBee address hierarchy and tree structure as discussed in previous section.

In other words, the remaining tree hops can be calculated using tree levels of source node, destination, and their common ancestor node, because the packet from the source node goes up to the common ancestor, which contains an address of the destination, and goes down to the destination in ZTR.

IV. PERFORMANCE EVALUATION

A. Topology formation

Constructing Project design in NS2 should take place each node should send hello packets to its neighbor node which are in its communication range to update their topology.

B. Tree structure (parent child identification)

The names of relationships between nodes are modeled after family relations. The gender-neutral names "parent" and "child" have largely displaced the older "father" and "son" terminology, although the term "uncle" is still used for other nodes at the same level as the parent.

- A node's "parent" is a node one step higher in the hierarchy (i.e. closer to the root node) and lying on the same branch.
- "Sibling" ("brother" or "sister") nodes share the same parent node.
- A node's "uncles" are siblings of that node's parent.
- A node that is connected to all lower-level nodes is called an "ancestor". The connected lower-level nodes are "descendants" of the ancestor node

C. Shortcut tree routing

The main idea of STR is that we can compute the remaining tree hops from an arbitrary source to a destination using ZigBee address hierarchy and tree structure as discussed in previous section. In other words, the remaining tree hops can be calculated using tree levels of source node, destination, and their common ancestor node, because the packet from the source node goes up to the common ancestor, which contains an address of the destination, and goes down to the destination in ZTR.

V. SIMULATION RESULT

Compare to the ZigBee Tree Routing algorithm, Shortcut Tree routing algorithm shows minimum loss in energy while transferring the data from source to destination.

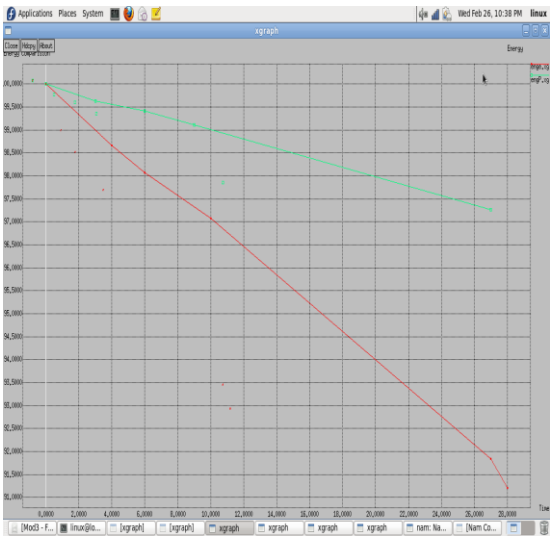

Figure 4. Energy comparsion graph.

VI. CONCLUSION

In this paper, we address the problem of reliable data delivery in highly dynamic mobile ad hoc networks. Constantly changing network topology makes conventional AD-HOV routing protocols incapable of providing satisfactory performance. In the face of frequent link break due to node mobility, substantial data packets would either get lost, or experience long latency before restoration of connectivity. Inspired by opportunistic routing, we propose a novel MANET routing protocol POR which takes advantage of the stateless property of geographic routing and broadcast nature of wireless medium. Besides selecting the next hop, several forwarding candidates are also explicitly specified in case of link break. Leveraging on such natural backup in the air, broken route can be recovered in a timely manner. The efficacy of the involvement of forwarding candidates against node mobility, as well as the overhead due to opportunistic forwarding is analyzed. Through simulation, we further confirm the effectiveness and efficiency of POR: high packet delivery ratio is achieved while the delay and duplication are the lowest. On the other hand, inherited from geographic routing, the problem of communication void is also investigated. To work with the multicast forwarding style, a virtual destination-based void handling scheme is proposed. By temporarily adjusting the direction of data flow, the advantage of greedy forwarding as well as the robustness brought about by opportunistic routing can still be achieved when handling communication voids. Traditional void handling method performs poorly in mobile environments while VDVH works quite well.

REFERNCES

1. J. Broch, D.A. Maltz, D.B. Johnson, Y.-C. Hu, and J. Jetcheva, "A Performance Comparison of Multi-Hop Wireless Ad Hoc Network Routing Protocols," Proc. ACM MobiCom, pp. 85-97, 1998.
2. M. Mauve, A. Widmer, and H. Hartenstein, "A Survey on Position-Based Routing in Mobile Ad Hoc Networks," IEEE Network, vol. 15, no. 6, pp. 30-39, Nov./Dec. 2001.
3. D. Chen and P. Varshney, "A Survey of Void Handling Techniques for Geographic Routing in Wireless Networks," IEEE Comm. Surveys and Tutorials, vol. 9, no. 1, pp. 50-67, Jan.-Mar. 2007.
4. D. Son, A. Helmy, and B. Krishnamachari, "The Effect of Mobility Induced Location Errors on Geographic Routing in Mobile Ad Hoc Sensor Networks: Analysis and Improvement Using Mobility Prediction," IEEE Trans. Mobile Computing, vol. 3, no. 3, pp. 233-245, July/Aug. 2004.
5. B. Karp and H.T. Kung, "GPSR: Greedy Perimeter Stateless Routing for Wireless Networks," Proc. ACM MobiCom, pp. 243- 254, 2000.
6. S. Biswas and R. Morris, "EXOR: Opportunistic Multi-Hop Routing for Wireless Networks," Proc. ACM SIGCOMM, pp. 133-144, 2005.
7. S. Chachulski, M. Jennings, S. Katti, and D. Katabi, "Trading Structure for Randomness in Wireless Opportunistic Routing," Proc. ACM SIGCOMM, pp. 169-180, 2007.
8. E. Rozner, J. Seshadri, Y. Mehta, and L. Qiu, "SOAR: Simple Opportunistic Adaptive Routing Protocol for Wireless Mesh Networks," IEEE Trans. Mobile Computing, vol. 8, no. 12,pp. 1622-1635, Dec. 2009.
9. A. Balasubramanian, R. Mahajan, A. Venkataramani, B.N. Levine, and J. Zahorjan, "Interactive WiFi Connectivity for Moving Vehicles," Proc. ACM SIGCOMM, pp. 427-438, 2008.
10. K. Zeng, Z. Yang, and W. Lou, "Location-Aided Opportunistic Forwarding in Multirate and Multihop Wireless Networks," IEEE Trans. Vehicular Technology, vol. 58, no. 6, pp. 3032-3040, July 2009.
11. S. Das, H. Pucha, and Y. Hu, "Performance Comparison of Scalable Location Services for Geographic Ad Hoc Routing," Proc. IEEE INFOCOM, vol. 2, pp. 1228-1239, Mar. 2005.

12. R. Flury and R. Wattenhofer, "MLS: An Efficient Location Service for Mobile Ad Hoc Networks," Proc. ACM Int'l Symp. Mobile Ad Hoc Networking and Computing (MobiHoc), pp. 226-237, 2006.
13. E. Felemban, C.-G. Lee, E. Ekici, R. Boder, and S. Vural, "Probabilistic QoS Guarantee in Reliability and Timeliness Domains in Wireless Sensor Networks," Proc. IEEE INFOCOM, pp. 2646-2657, 2005.
14. D. Chen, J. Deng, and P. Varshney, "Selection of a Forwarding Area for Contention-Based Geographic Forwarding in Wireless Multi-Hop Networks," IEEE Trans. Vehicular Technology, vol. 56, no. 5, pp. 3111-3122, Sept. 2007.
15. N. Arad and Y. Shavitt, "Minimizing Recovery State in GeographicAd Hoc Routing," IEEE Trans. Mobile Computing, vol. 8, no. 2, pp. 203-217, Feb. 2009.
16. Y. Han, R. La, A. Makowski, and S. Lee, "Distribution of Path Durations in Mobile Ad-Hoc Networks - Palm's Theorem to the Rescue," Computer Networks, vol. 50, no. 12, pp. 1887-1900, 2006.
17. W. Navidi and T. Camp, "Stationary Distributions for the Random Waypoint Mobility Model," IEEE Trans. Mobile Computing, vol. 3, no. 1, pp. 99-108, Jan./Feb. 2004.
18. R. Groenevelt, "Stochastic Models for Mobile Ad Hoc Networks," PhD dissertation, Universite de Nice, Sophia Antipolis, France,2005.
19. The Network Simulator ns-2, http://www.isi.edu/nsnam/ns, 2011.
20. M. Marina and S. Das, "On-Demand Multipath Distance VectorRouting in Ad Hoc Networks," Proc. Ninth Int'l Conf. Network Protocols (ICNP '01), pp. 14-23, Nov. 2001.
21. J. Yoon, M. Liu, and B. Noble, "Random Waypoint Considered Harmful," Proc. IEEE INFOCOM, pp. 1312-1321, 2003.
22. S. Mueller, R. Tsang, and D. Ghosal, "Multipath Routing in Mobile Ad Hoc Networks: Issues and Challenges," Performance Tools and Applications to Networked Systems, pp. 209-234, Springer, 2004.
23. D. Ganesan, R. Govindan, S. Shenker, and D. Estrin, "Highly Resilient, Energy-Efficient Multipath Routing in Wireless Sensor Networks," ACM SIGMOBILE Mobile Computing and Comm. Rev., vol. 5, no. 4, pp. 11-25, 2001.
24. A. Valera, W. Seah, and S. Rao, "Improving Protocol Robustness in Ad Hoc Networks through Cooperative Packet Caching and Shortest Multipath Routing," IEEE Trans. Mobile Computing, vol. 4, no. 5, pp. 443-457, Sept./Oct. 2005.

AUTHORS PROFILE

Sharmilaa S, received the B.E. degree in Electronics and Instrumentation Engineering from Bannari Amman Institute of Technology, India, in 2011 and studying the M.Tech degree in Embedded Systems from PRIST University, India. She already published the paper in journal related to Energy Conservation in Co-Generation plant relating to turbine exhaust steam condensing system in International Journal of Research and Reviews in Computing Engineering Vol.1, No.1, March 2011.