A Review on Modeling and Analysis of Car Wheel Rim using CATIA & ANSYS

T. Siva Prasad,T. Krishnaiah, J. Md. Iliyas, M. Jayapal Reddy

Abstract- The essence of car wheel rim provides a firm base on which to fit the tire. Its dimensions, shape should be suitable to adequately accommodate the particular tire required for the vehicle. In this project a tire of car wheel rim belonging to the disc wheel category is considered. Design is an important industrial activity which influences the quality of the product. The wheel rim is modeled by using modeling software catiav5r17. By using this software the time spent in producing the complex 3-D models and the risk involved in the design and manufacturing process can be easily minimized. So the modeling of the wheel rim is made by using CATIA. Later this CATIA modal is imported to ANSYS for analysis work. ANSYS is the latest software used for simulating the different forces, pressure acting on the component and also calculating and viewing the results. By using ANSYS software reduces the time compared with the method of mathematical calculations by a human. ANSYS static analysis work is carried out by considered two different materials namely aluminium and forged steel and their relative performances have been observed respectively. In addition to wheel rim is subjected to modal analysis, a part of dynamic analysis is carried out its performance is observed. In This paper by observing the results of both static and dynamic analysis obtained forged steel is suggested as best material.

Keywords: ANSYS, CATIA V5, Stress Analysis, Wheel Rim

I. INTRODUCTION

Archaeologies and historians of today see the introduction of the wheel as the real genesis of any old civilization. The wheel is the most significant discovery of old times. The wheel has developed from an oversized bearing to a fully integral part of any modern transportation vehicle. The modern motor vehicles are produced according to very strict rules to ensure the safety of passengers.

Materials to produce these wheels have become has sophisticated as a design and material can range from steel to non ferrous alloys like magnesium and aluminium. Automotive wheels have evolved over the decades from early spoke design of wood and steel. Today's modern vehicles are uses the stamped metal configuration and modern cast and forged aluminium alloys rims. Since the 1970's several innovative methods of testing well aided with experimental stress measurement have been initiated [1].

In recent years, the procedures have been improved by a variety of experimental and analytical methods for structural analysis (finite element method).

Manuscript received on May, 2014.

T.Siva Prasad, Associate Professor in Mechanical Engineering, Vignana Bharathi Institute of Technology, Proddatur, Kadapa dist, A. P., India.

T.Krishnaiah, Assistant Professor in Mechanical Engineering, Vignana Bharathi Institute of Technology, Proddatur, Kadapa dist, A. P., India.

Jmd . Iliyas, studying IV B. Tech Mechanical Engineering in , Vignana Bharathi Institute of Technology, Proddatur, Kadapa dist, A. P., India.

M.Jayapal Reddy, Assistant Professor in Mechanical Engineering, Vignana Bharathi Insititute of Technology, Proddatur, Kadapa dist, A.P., India.

Within the past 10 years, durability analysis (fatigue life predication) and reliability method for dealing with variations inherent in engineering structure have been applied to the automotive wheel Braking performance shows effect on the wheel rim parameters: size, weight, design and materials. The size of the wheel rim governs how much space there is between the rim and brake rotor. If the diameter of the wheel rim is higher there will be more scope for air flow around the brakes and therefore better cooling. The weight of the wheel rim is also an important issue. The handling of a vehicle is always improved with light weight.

The rotational inertia is also obvious factor goes up with more weights as well, causing even more work for the brakes. Another factor in handling has to do with wheel strength and flex. A more rigid wheel will reduce wheel flex. This is essentially important with low aspect ratio, high performance tires that can be generate high cornering forces.

Car wheels are classified in to two main groups, steel wheels and alloy wheels. Alloy wheels are frequently fitted typical during the manufacturing of modern vehicles. All steel wheels to be made up of two pressed components, the rim and the wheel disc, which are welded together.

II. THEORY OF WHEELS

The tire works as a wheel only after it is set up on the rim and is inflated therefore: the tire and wheels assembly affects the function and performance of the vehicle. The tire is designed and manufactured to suit a usual rim and once installed on correct rim the tire will perform up to the preferred level [1]

2.1 Rim Nomenclature

1. **Wheel:** Wheel is generally constitute of rim and disc
2. **Rim:** This is a part where the tire is installed
3. **Disc**: This is a part of the rim where it is fixed to the axle hub
4. **Offset:**This is a space between wheel mounting surface where it is bolted to hub and centre of the line.

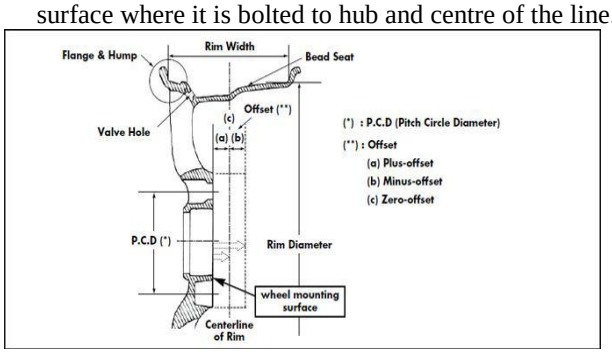

Fig 1.Rim Nomenclature

Published By:
Blue Eyes Intelligence Engineering
& Sciences Publication

5. **Flange:** The flange is a part of rim which holds the both beds of the tire
6. **Bead Seat:** Bead seat approaches in contact with the bead face and it is a part of rim which holds the tire in a radial direction
7. **Hump:** It is a bump what was put on the bed seat for the bead to prevent the tire from sliding off the rim while the vehicle is moving
8. **Well:** This is a part of rim with depth and width to facilitate tire mounting and removal from the rim

2.2 Type of Wheel Rim: (Dimensional)

2.2.1.Shape of Rim

Typical rim shape vehicles are made up of the following

a) Drop centre rim

Drop centre (DC) rim is shaped so there is fine between the bead seat parts which are placed on the both sides of the rim. This makes mounting and demounting of the rim easy.

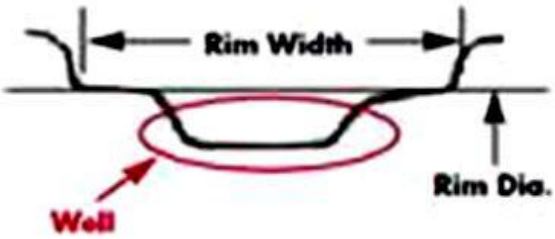

Fig 2.Drop Centre Rim

b) Wide Drop Centre Rim (WDC)

Wide drop centre rim is mostly the same DC rim. To extend the width of the rim, with a slighter well and a lower flange height, this rim is mostly applied to low aspect ratio tires. This design is presently applied to rims for tires of most passenger vehicles.

c) Wide Drop Centre Rim with Hump

In addition, this design has a bump, on the beginning of the bead seat area. This bump is to prevent the bead sliding down and air outflow from the rim due to the horizontal force applied to the tire when a vehicle tubeless tires runs at high speed.

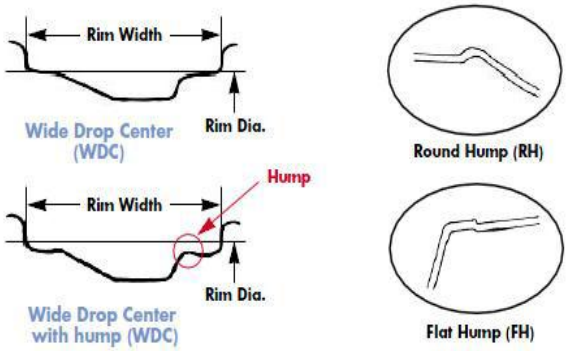

Fig.3. WDC with Hump

2.2.2 Types of Wheel Rim (Material)

Steel and light alloy are the foremost materials used in a wheel rim however some composite materials together with glass-fibre are being used for special wheels [2].

a) Wire spoke Wheel

Wire spoke wheel is an essential where the exterior edge part of the wheel rim and the axle mounting part are linked by numerous wires called spokes. Today's automobiles with their high horse power have made this type of wheel manufacture obsolete. This type of wheel is still used on classic vehicles.

b) Steel Disc Wheel

This is a rim which practices the steel made rim and the wheel into one by joining (welding), and it is used mainly for passenger vehicles especially original equipment tires

c) Light Alloy wheel

These wheels are based on the use of light metals, such as aluminium and magnesium has come to be popular in the market. This wheel rapidly become standard for original equipment vehicle in Europe in 1960's and for the replacement tire in United States in 1970's. The advantages of each light alloy wheel are explained as below.

i. Aluminium Alloy Wheel

Aluminium is a metal with features of excellent lightness, thermal conductivity, physical characteristics of casting, low heat, machine processing and reutilizing, etc. This metal main advantage is decreased weight, high precision and design choices of the wheel.

ii. Magnesium alloy Wheel

Magnesium is about 30% lighter than aluminium and also admirable as for size stability and impact resistance. However its use is mainly restricted to racing, which needs the features of weightlessness and high strength. It is expansive when compared with aluminium

iii. Titanium alloy wheel

Titanium is an admirable metal for corrosion resistance and strength about 2.5 times compared with aluminium, but it is inferior due to machine processing, designing and more cost. It is still in developed stage.

iv. Composite material wheel

The composite material wheel is different from the light alloy wheel, and it is developed mainly for low weight. However this wheel has inadequate consistency against heat and for best strength.

III. MODELING OF WHEEL RIM

CATIA is modeling software which is used for creation and modification of the objects. In CATIA design and modeling features are available. Design means the process of creating a new object or modifying the existing object. Drafting means the representation or idea of the object. Modeling means create and converting 2D to 3D. By using CATIA software create the model of wheel rim [3].

Specifications of Model Wheel Rim

Outer diameter = 450 mm
Rim width=254 mm
Bolt hole diameter=10 mm
Wheel type = Disc wheel
Flange shape = J
Tire type = Radial
Aspect Ratio = 65
Offset = 87.5mm
Edge fillet radius = 5 mm

3.1 Steps involved in Design

1. Draw the profile diagram of the wheel rim in the front view as follows

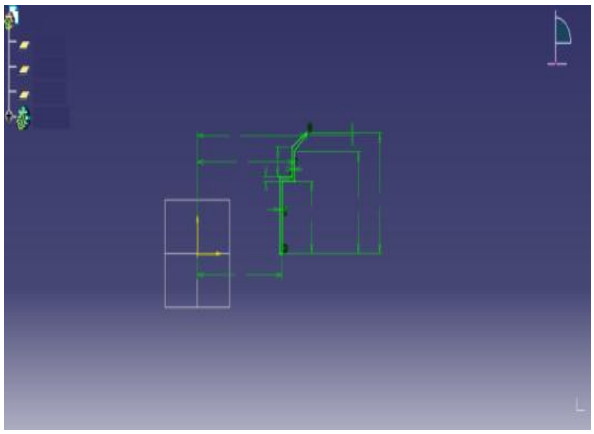

2. Now revolve the profile body with respect to z-axis by using shaft command. Then we obtain the wheel rim body as

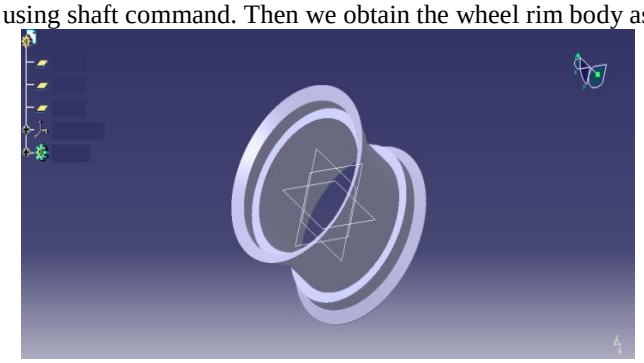

3. By selecting the face of the wheel (top view), the required is drawn on the surface and remove by using pocket operation

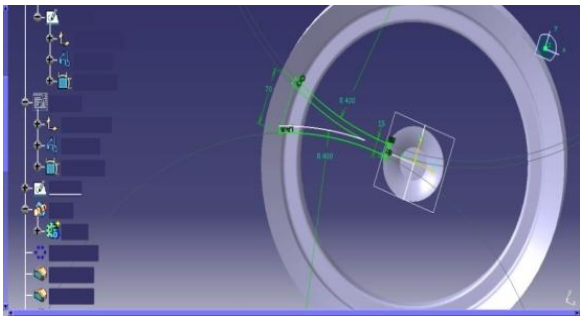

4. By using the circular pattern the specific design is obtained all over the rim
5. Form holes using POCKET operation
6. Finally using the EDGE FILLET option the side edges are made filleted for final finishing

3.2 Final View of the Wheel rim

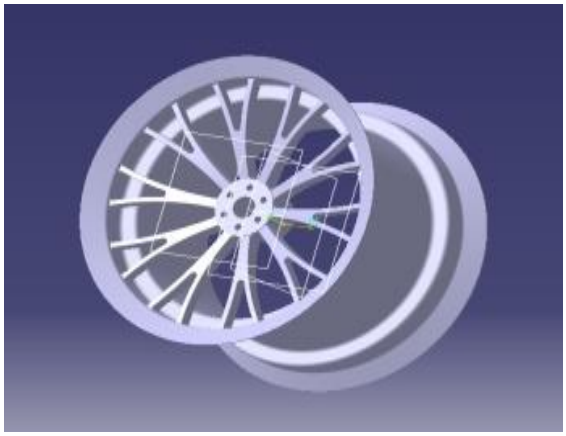

IV. RESULT ANALYSIS

1. After preparing the model in CATIA it is imported to ANSYS Work Bench.
2. The imported Model is meshed by using the mesh option. The meshed model is as follows

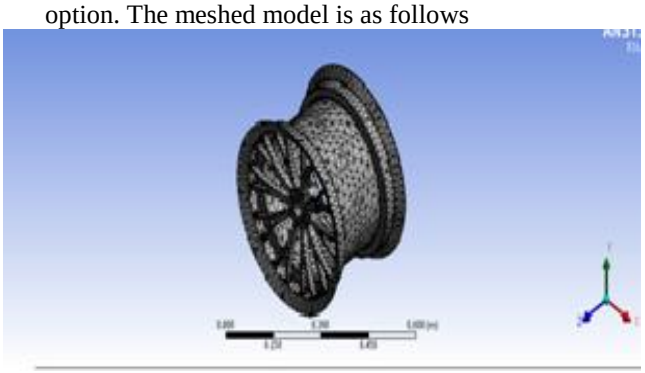

3. Later this meshed model is subjected with two different materials namely ALUMINIUM ALLOY and FORGED STEEL and subjected to static and dynamic analysis.

4.1PROPERTIES OF MATERIALS:

Input data for ALUMINIUM ALLOY:
Young's modulus= 0.71e5 N/mm2
Poisson's ratio = 0.33
Density = 2800 kg/m3
Circumferential pressure = 21.3kpa
Input data for FORGED STEEL:
Young's modulus = 2.3e5 N/mm2
Poisson's ratio = 0.3
Density = 7600 kg/m3
Circumferential pressure = 21.3kpa

1. After this meshed model is constrained all DOF where the bolts has to be placed
2. Now the model is subjected to circumferential load of 23.1kpa
3. Apply the angular velocity 62.8 rps in rotational direction of wheel rim
4. Select the solve option to apply the loads on the wheel rim
5. Later do the both static and dynamic analysis to the model
6. Next solution results the displacement, von mises stress, stress intensity, dynamic deformation etc.

4.1.1 Results for Aluminium Wheel Rim

a) Displacement results

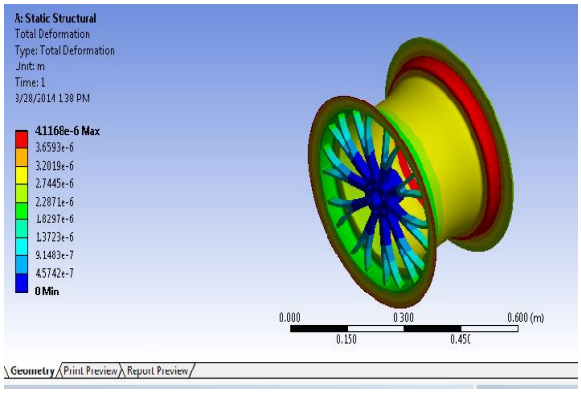

Published By:
Blue Eyes Intelligence Engineering
& Sciences Publication

b) Von-Mises stresses

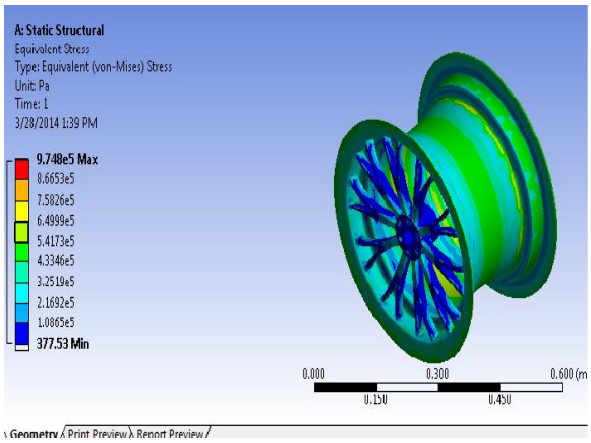

c) Stress Intensity

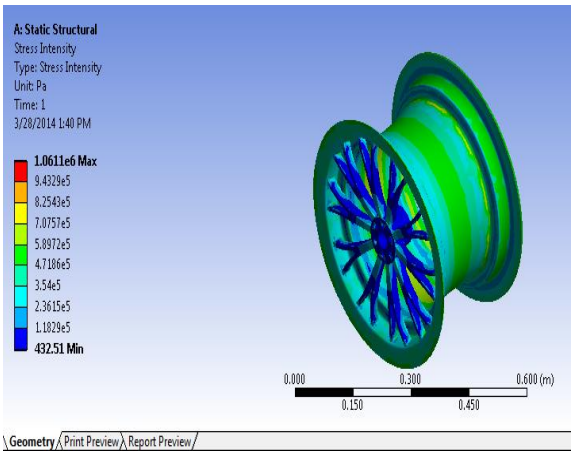

d) Dynamical Displacement

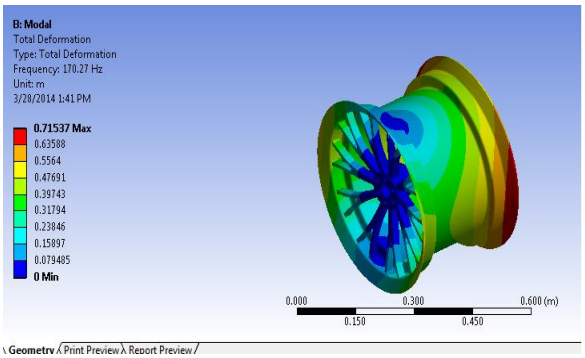

4.1.2 Results for Forged Steel Wheel Rim

a) Displacement Result

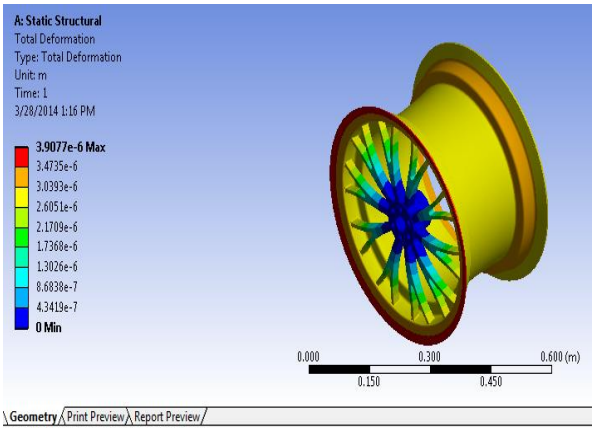

b) Von-Mises Stresses

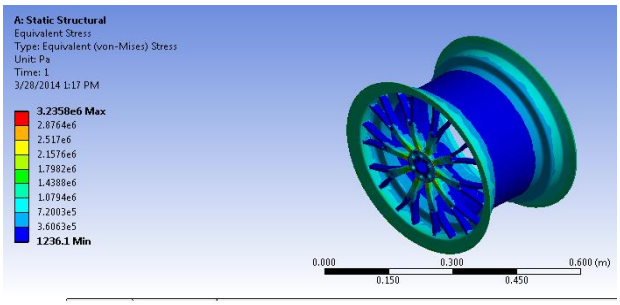

c) Stress Intensity

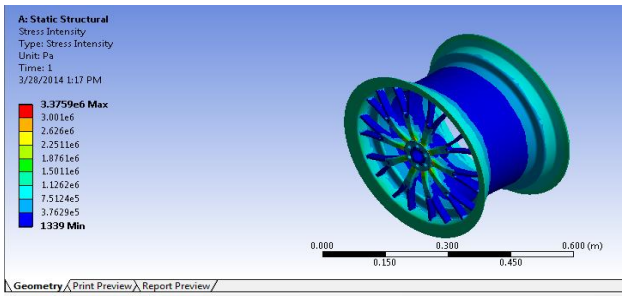

d) Dynamical Displacement

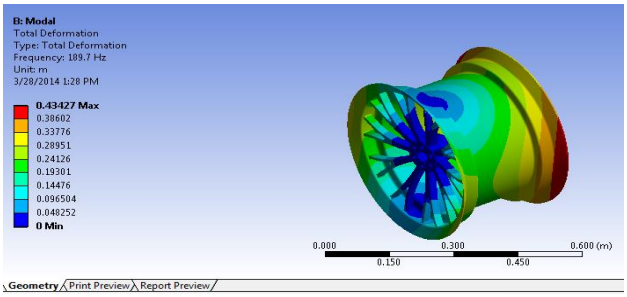

4.1.3 Mode Shape Results and Frequencies

A) For Aluminium alloy

1. At first node frequency is 170.48 Hz

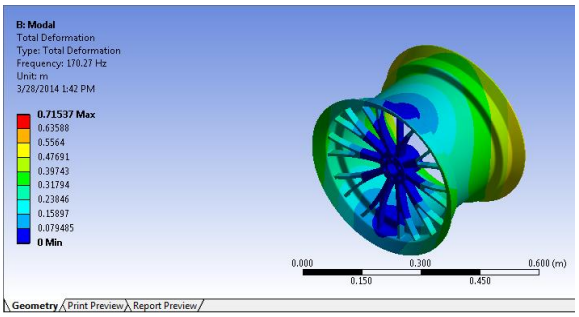

2. At fifth node frequency is 370.5Hz

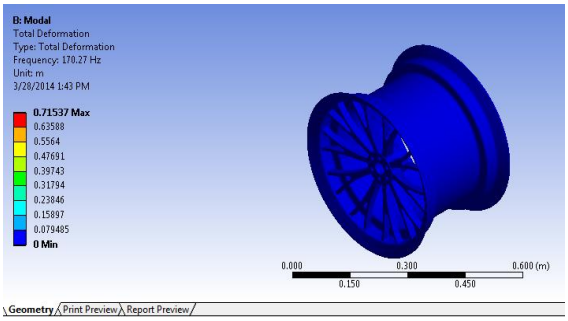

Published By:
Blue Eyes Intelligence Engineering
& Sciences Publication

B) For Forged Steel

1. At first node frequency is 189.7 Hz

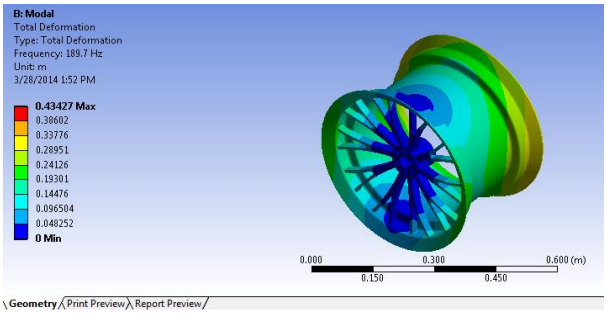

2. At fifth node frequency is 412.85 Hz

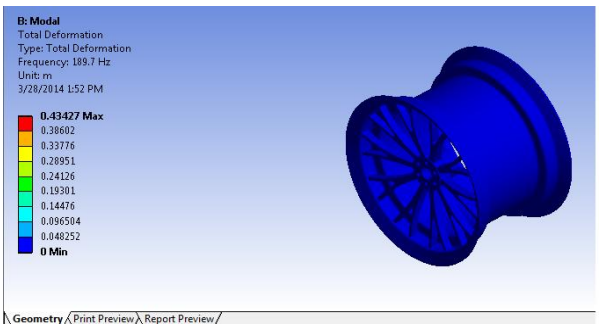

The frequency is different at different mode shapes which are as shown above.

4.1.4 STRESSES RESULTS

TYPE OF RESULT	FOR ALUMINIUM ALLOY	FOR FORGED STEEL
STATICAL DISPLACEMENT	4.1168e-6	4.077e-6
VON-MISES STRESS	9.748e5	3.2348e6
STRESS INTENSITY	1.0611e6	3.3759e6
DYNAMICAL DIAPLACEMENT	0.71537	0.43427

Fig 4.1.4.1. Results Comparison

V. CONCLUSION:

CAD model of the wheel rim is generated in CATIA and this is imported to ANSYS for processing work. An amount of 21.3kpa is applied along the circumference of the wheel rims made of both ALUMINIUM ALLOY & FORGED STEEL and bolt circle of wheel rim is fixed. Following are the conclusions from the results obtained:

1. Aluminum alloy wheel rim is subjected to more displacement compared to Forged steel
2. In both cases von-mises stresses are less than stress intensity
3. Aluminum alloy wheel rim subjected to more stresses compared to Forged steel
4. Since in both the cases von-mises stresses less than the ultimate strength i.e.stresses intensity, hence deflections taking into account, Forged steel is preferred as best material for designing of wheel rim.

REFERENCES

1. "An analysis of stress and displacement distribution in a rotating rim subjected to pressure and radial loads" By P.C.Lam and T.S.srivastam
2. Stress Analysis of Wheel Rim International Journal of Mechanical Engineering and Research Volume 1 Issue 1 (page 34-37), ISSN: 2277-8128
3. CATIA V5 Fundamentals, www.http://handbook5.com/c/catia-v5 - fundamentals-w3524.html
4. Fatigue Analysis of Aliminium alloy Wheel under Radial Load, International Journal Mechanical and Industrial Engineering (IJMIE), ISSN No.2231-6477, Vol-2, Issue-1, 2012
5. THE TIRE AND RIMASSOCIATION, INC (1996), "50 Crop Centre Rim Contours", J (ISO) Contour for 14, 15,16,18 and 20 diameter designation, pp7.05

AUTHORS PROFILE

T.Siva Prasad, received his M.Tech (Production Engineering) from Sri Venkateswara University,Tirupathi. Presently he is working as Associate Professor in Mechanical Engineering, Vignana Bharathi Institute of Technology, Proddatur, Kadapa dist, A. P., India

T.Krishnaiah received his M.Tech (Industrial Engineering) from Sri Venkateswara University,Tirupathi. Presently he is working as Assistant Professor in Mechanical Engineering, Vignana harathi Institute of Technology, Proddatur, Kadapa dist, A. P., India.

Jmd. Iliyas, studying IV B. Tech Mechanical Engineering in , Vignana Bharathi Institute of Technology, Proddatur, Kadapa dist, A. P., India

M.Jayapal Reddy, received his M.Tech (CAD/CAM) from JNTU Kakinada. Presently he is Working as Assistant Professor in Mechanical Engineering, Vignana Bharathi Insititute of Technology, Proddatur, Kadapa dist, A.P., India.